DRC
PZ26-12000001
04/01/2026

FIRE METERS - OS & Y VALVES, GASKETS & METER (NEPTUNE MACH 10 Ultrasonic Meter)					
SIZE	VALVES (2)	GASKETS (4)	METER w/ Strainer	TOTAL LENGTH	
3" w/ 4" X 3" Reducer **	16"	1/2"	30" **	46 1/2"	
4"	18"	1/2"	27 1/2"	46"	
6"	21"	1/2"	33"	54 1/2"	
8"	23"	1/2"	30"	53 1/2"	
10"	26"	1/2"	41"	67 1/2"	
FIRE &/or Domestic Water SERVICE METERS - TEES, OS & Y VALVES, GASKETS & METERS					
(NEPTUNE MACH 10 Ultrasonic Meter)			Meter w/ Strainer	TOTAL LENGTH	
SIZE	TEES (2)	VALVES (2)	GASKETS (6)		
3" w/ 4" X 3" Reducer **	3" X 3" - 22"	16"	3/4"	30" **	68 3/4"
4"	4" X 3" - 26"	18"	3/4"	27 1/2"	72 1/4"
6"	6" X 4" - 32"	21"	3/4"	33"	86 3/4"
8"	8" X 4" - 36"	23"	3/4"	30"	89 3/4"
10"	10" X 6" - 44"	26"	3/4"	41"	111 3/4"

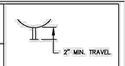

*All fittings, valves and meters are flanged & all dimensions are from face of flange to face of flange.

NOTE:
PLEASE NOTE THAT WATER METERS 3" AND LARGER ARE SUBJECT TO AN APPROXIMATE ORDER LEAD TIME OF 60 TO 75 BUSINESS DAYS AFTER FULL PAYMENT. PLEASE CONTACT CUSTOMER SERVICE AT 954-786-4637 TO ARRANGE FOR METER PROCUREMENT AND INSTALLATION. LARGE METERS MUST BE AT MINIMUM ORDERED PRIOR TO INITIAL INSPECTIONS.

ENGINEERING STANDARDS 2025

REVISIONS BY	DATE	ENGINEERING DIVISION CITY OF POMPANO BEACH	METER INSTALL DIMENSION LIST	DATE: JAN. 2022 DWG. NO. 106-4
T.W.	02-2008			
S.S.	11-2016			
A.S.	01-2022	SCALE: N.T.S.		

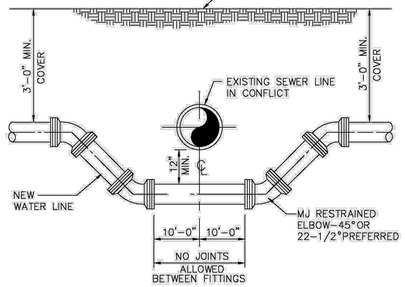

NOTES
WHERE CONDITIONS PERMIT, PIPE DEFLECTION MAY BE USED INSTEAD OF BENDS TO OBTAIN THE MINIMUM CLEARANCE. FACTORY OFFSETS MAY BE USED.

TYPICAL CONFLICT DETAIL

USE MEGALUGS AT ALL PIPE JOINTS

ALL D.I.P. TO BE PAINTED BLUE ON TOP HALF OF PIPE.

ENGINEERING STANDARDS 2025

REVISIONS BY	DATE	ENGINEERING DIVISION CITY OF POMPANO BEACH	TYPICAL CONFLICT (WATER)	DATE: MAY 2022 DWG. NO. 108-1
S.S.	04-2005			
S.S.	01-2012			
		SCALE: N.T.S.		

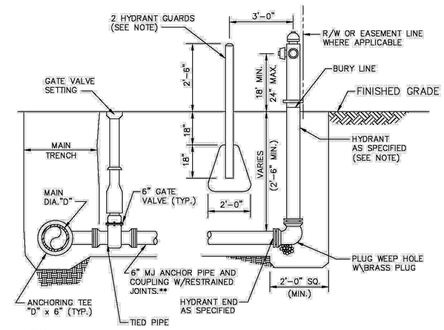

NOTES
HYDRANT GUARDS TO BE 6" DIAMETER GALVANIZED STEEL PIPE PAINTED YELLOW FILLED WITH CONCRETE. OMIT GUARDS IN LOCATIONS WHERE SIDEWALKS EXIST.

**USE 2-3/4" S.S. TIE RODS WHEN DISTANCE BETWEEN MAIN AND HYDRANT < 10'. TIE RODS WILL BE USED W/RESTRAINED JOINTS OR USE MEGALUGS AT ALL PIPE JOINTS

HYDRANTS INSTALLED ON EXISTING WATER MAINS MUST USE A MUELLER MJ DI TAPPING SLEEVE, H-615 OR APPROVED EQUAL.

HYDRANTS CONNECTED TO NEW MAINS SHALL BE CONNECTED USING A HYDRANT TEE.

ALL POMPANO BEACH HYDRANTS SHALL BE PAINTED RED.

TYPICAL FIRE HYDRANT ASSEMBLY

ENGINEERING STANDARDS 2025

REVISIONS BY	DATE	ENGINEERING DIVISION CITY OF POMPANO BEACH	FIRE HYDRANT ASSEMBLY	DATE: MAY 2022 DWG. NO. 109-1
T.W.	11-2007			
T.W.	10-2010			
S.S.	2-2012			
S.S.	11-2012	SCALE: N.T.S.		

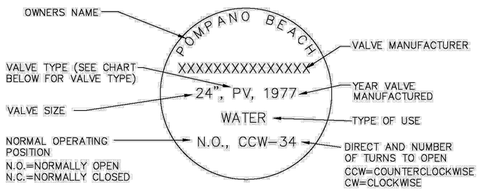

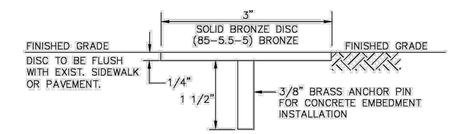

VALVE TYPES
BALL VALVE--BALLY
RESILIENT WEDGE GATE VALVE--RWGV
BUTTERFLY VALVE--BV
PLUG VALVE--PV

NOTES:
1. VALVE INFORMATION TO BE TRIPLE ENGRAVED INTO TOP SURFACE WITH 1/4" CAPITAL LETTERS.
2. ENTIRE MARKER TO BE COATED WITH CLEAR EPOXY TO PREVENT TARNISHING.
3. VALVE INFORMATION TO BE APPROVED BY CITY OF POMPANO BEACH UTILITIES DEPARTMENT.
4. MARKERS SHALL BE MANUFACTURED BY RG WRENCH, OR APPROVED EQUAL

UNDERGROUND VALVE IDENTIFICATION MARKER

ENGINEERING STANDARDS 2025

REVISIONS BY	DATE	ENGINEERING DIVISION CITY OF POMPANO BEACH	UNDERGROUND VALVE IDENTIFICATION MARKER	DATE: FEB. 2022 DWG. NO. 115-1
S.S.	JUNE 2005			
T.W.	11-2007			
T.W.	02-2008			
S.S.	1-24-12	SCALE: N.T.S.		

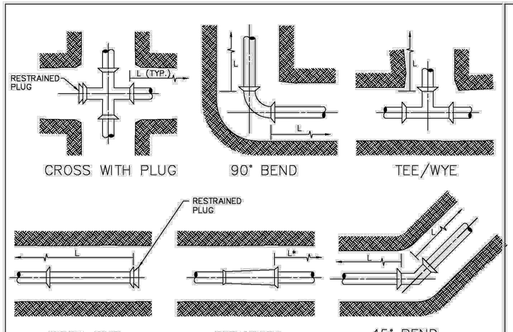

GENERAL NOTES:
1. VALUES IN TABLE ARE BASED ON 3' OF COVER, 100 PSI INTERNAL PRESSURE, FOR FORCE MAINS, 150 PSI REUSE WATER LINES, ANSI/AWWA C605 & C150/A21.50 LAYING CONDITION 3, ASTM D2487 SAND-SILT SP SOIL TYPE, AND SAFETY FACTOR OF 2.0. RESTRAINED LENGTHS WERE COMPUTED PER DIPRA "THRUST RESTRAINT DESIGN FOR DUCTILE IRON PIPE" AND "PVC PIPE THRUST RESTRAINT DESIGN HANDBOOK," EBAA IRON, INC.
2. CONFIRM THE EXACT LENGTH OF RESTRAINING REQUIRED FOR REDUCERS, PIPE ENCASED IN POLYETHYLENE AND ENCROACHING RESTRAINED LENGTHS WITH THE DESIGN ENGINEER.
3. THE CONTRACTOR IS RESPONSIBLE FOR PROPER INSTALLATION OF THE RESTRAINED JOINTS TO PREVENT MOVEMENT OF THE PIPE & FITTINGS.
4. IN THE EVENT OF A CONFLICT BETWEEN RESTRAINED LENGTHS SHOWN ON THE TABLE AND RESTRAINED LENGTHS SHOWN ON THE DRAWINGS, THE LONGEST RESTRAINED LENGTH SHALL BE USED.

RESTRAINED JOINT INFORMATION

ENGINEERING STANDARDS 2025

REVISIONS BY	DATE	ENGINEERING DIVISION CITY OF POMPANO BEACH	RESTRAINED JOINT INFORMATION	DATE: MAY 2022 DWG. NO. 118-1
		SCALE: N.T.S.		

PVC HORIZONTAL BENDS AND VERTICAL UP BENDS

	RESTRAINED JOINT LENGTH L				(MINIMUM DISTANCE IN FEET FROM FITTING – EACH WAY)
PIPE SIZE (IN.)	BENDS				CROSS WITH PLUG DEAD END TEE/WYE
	90°	45°	22.5°	11.25°	
6	26	11	6	3	53
8	33	14	7	4	68
12	46	19	10	5	96

PVC VERTICAL DOWN BEND

	RESTRAINED JOINT LENGTH L				(MINIMUM DISTANCE IN FEET FROM FITTING – EACH WAY)
PIPE SIZE (IN.)	BENDS				
	90°	45°	22.5°	11.25°	
6	26	11	6	3	
8	33	14	7	4	
12	46	19	10	5	

DIP HORIZONTAL BENDS AND VERTICAL UP BENDS

	RESTRAINED JOINT LENGTH L				(MINIMUM DISTANCE IN FEET FROM FITTING – EACH WAY)
PIPE SIZE (IN.)	BENDS				CROSS WITH PLUG DEAD END TEE/WYE
	90°	45°	22.5°	11.25°	
12"	68	28	14	7	144
24"	119	49	24	12	258

DIP VERTICAL DOWN BEND

	RESTRAINED JOINT LENGTH L				(MINIMUM DISTANCE IN FEET FROM FITTING – EACH WAY)
PIPE SIZE (IN.)	BENDS				
	90°	45°	22.5°	11.25°	
12"	144	60	29	14	
24"	258	107	51	25	

RESTRAINED JOINT INFORMATION

ENGINEERING STANDARDS 2025

REVISIONS BY	DATE	ENGINEERING DIVISION CITY OF POMPANO BEACH	RESTRAINED JOINT INFORMATION	DATE: MAY 2022 DWG. NO. 118-2
		SCALE: N.T.S.		

MIN. LENGTH OF PIPE (FEET) TO BE RESTRAINED
(SOURCES: EBAA IRON RESTRAINT LENGTH CALCULATION PROGRAM FOR PVC PIPE, RELEASE 3.1; AND DIPRA THRUST RESTRAINT FOR DUCTILE IRON PIPE, RELEASE 3.2)

FITTING TYPE		PIPE SIZE								200psi			
		4"	6"	8"	10"	12"	16"	20"	24"	30"	36"	42"	48"
90° HORIZ. BEND		14	20	25	30	35	45	54	62	98	112	124	135
45° HORIZ. BEND		6	8	11	13	15	19	22	26	41	46	51	56
22.5° HORIZ. BEND		3	4	5	6	7	9	11	12	19	22	25	27
11.25° HORIZ. BEND		1	2	3	3	4	4	5	5	10	11	12	13
90° VERT. OFFSET	UPPER BEND	29	41	53	64	74	95	115	134	214	246	278	304
	LOWER BEND	7	10	13	16	19	25	30	35	57	66	74	83
45° VERT. OFFSET	UPPER BEND	12	19	24	29	34	39	48	56	89	102	114	126
	LOWER BEND	3	4	6	7	8	10	12	15	23	27	31	34
22.5° VERT. OFFSET	UPPER BEND	6	9	12	14	17	19	23	27	43	49	55	60
	LOWER BEND	1	2	4	4	4	5	6	7	11	13	15	16
11.25° VERT. OFFSET	UPPER BEND	3	4	6	7	8	9	11	13	21	24	27	30
	LOWER BEND	1	1	1	2	2	2	3	3	6	6	7	8
PLUG (DEAD END)		32	45	59	70	83	107	129	151	214	246	278	304
IN-LINE VALVE		32	45	45	45	45	56	65	80	110	125	140	155
TEE (BRANCH RESTRAINT)	4"x Ø	23	–	–	–	–	–	–	–	–	–	–	–
	6"x Ø	21	35	–	–	–	–	–	–	–	–	–	–
	8"x Ø	18	34	47	–	–	–	–	–	–	–	–	–
	10"x Ø	16	32	46	58	–	–	–	–	–	–	–	–
	12"x Ø	13	30	44	57	69	–	–	–	–	–	–	–
	16"x Ø	7	26	41	55	67	90	–	–	–	–	–	–
	20"x Ø	1	21	38	52	65	88	109	–	–	–	–	–
	24"x Ø	1	16	34	49	62	86	108	129	–	–	–	–
	30"x Ø	1	8	28	44	58	83	105	127	208	–	–	–
	36"x Ø	1	1	22	39	54	80	103	124	205	240	–	–
	42"x Ø	1	1	15	33	49	77	100	122	205	239	270	–
	48"x Ø	1	1	1	27	44	73	97	120	203	238	269	298
REDUCER (LARGER PIPE RESTRAINT)	6"x Ø	23	–	–	–	–	–	–	–	–	–	–	–
	8"x Ø	38	25	–	–	–	–	–	–	–	–	–	–
	10"x Ø	57	43	24	–	–	–	–	–	–	–	–	–
	12"x Ø	72	60	44	41	–	–	–	–	–	–	–	–
	16"x Ø	99	90	78	75	45	–	–	–	–	–	–	–
	20"x Ø	123	116	107	105	81	45	–	–	–	–	–	–
	24"x Ø	146	140	132	131	111	82	45	–	–	–	–	–
	30"x Ø	209	204	197	188	177	153	118	75	–	–	–	–
	36"x Ø	243	236	233	226	217	196	168	135	74	–	–	–
	42"x Ø	273	270	265	259	252	234	211	183	133	72	–	–
	48"x Ø	301	298	294	289	283	268	249	226	183	131	71	–

NOTES:
1. THE DATA IN THE ABOVE TABLE ARE BASED UPON THE FOLLOWING INSTALLATION CONDITIONS:
   SOIL TYPE-SAND TEST PRESSURE-150 PS/200 PSI DEPTH OF BURY-3'
   TRENCH TYPE-3 SAFETY FACTOR-1.5 VERTICAL OFFSET-3'
   MINIMUM PIPE LENGTH ALONG TEE RUN-0'
2. THE RESTRAINED PIPE LENGTHS APPLY TO DUCTILE IRON AND PVC PIPE.
3. ALL JOINTS BETWEEN UPPER AND LOWER BENDS SHALL BE RESTRAINED.
4. RESTRAINED PIPE LENGTHS APPLY TO PIPE ON BOTH SIDES OF VALVES AND FITTINGS.

RESTRAINED JOINT INFORMATION

ENGINEERING STANDARDS 2025

REVISIONS BY	DATE	ENGINEERING DIVISION CITY OF POMPANO BEACH	RESTRAINED JOINT INFORMATION	DATE: MAY 2022 DWG. NO. 118-3
		SCALE: N.T.S.		

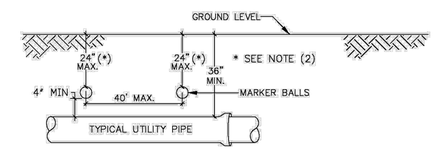

GENERAL NOTES:
1. ALL UTILITY PIPE SHALL BE INSTALLED WITH 4"ø MARKING BALLS PLACED EVERY 40' AND AT EVERY FITTING, FOR IDENTIFICATION AND WARNING PURPOSES, BURIED ABOVE THE PIPE AT A MAXIMUM DEPTH OF 24 INCHES OR AS APPROVED BY THE OWNER. IT SHALL BE COLOR CODED AND WORDED AS FOLLOWS:

   POTABLE WATER.
   A. COLOR: BLUE PER 62-555.320(21)(b)(3) F.A.C.
   B. LETTERING: WATER
   C. FREQUENCY OF MARKER BALLS SHALL BE 145.7 Khz.
   D. THE MARKER BALLS CAN BE BURIED IN ANY ORIENTATION.

   THE MARKER BALLS SHALL BE DETECTABLE BY STANDARD METAL DETECTION EQUIPMENT AND SHALL BE MANUFACTURED BY TEMPO OR 3M LOCATOR SYSTEM OR EQUIVALENT (FREQUENCY 145.7 Khz)
2. FOR LARGE DIAMETER PIPE INSTALLED AT DEPTHS BELOW 4'-0" MARKER BALLS SHALL BE PLACED AT A MAXIMUM DEPTH OF 4'-0" BELOW GRADE *.

WATER PIPE IDENTIFICATION

ENGINEERING STANDARDS 2025

REVISIONS BY	DATE	ENGINEERING DIVISION CITY OF POMPANO BEACH	WATER PIPE IDENTIFICATION	DATE: JAN. 2022 DWG. NO. 119-1
S.S.	01/12			
S.S.	06/16			
		SCALE: N.T.S.		

DRC
PZ26-12000001
08/05/2026

DRC
PZ26-12000001
05/20/2026

KEITH
2200 West Atlantic Blvd.
Pompano Beach, FL 33060
PH: (954) 788-3400
Florida Engineering Business License: CA7928
Florida Surveyor and Mapper Business License: LB6860
Florida Landscape Architecture Business License: LC26000457

REVISIONS

NO.	DESCRIPTION	DATE

PRELIMINARY PLAN NOT FOR CONSTRUCTION
THESE PLANS ARE NOT FULLY PERMITTED AND ARE SUBJECT TO REVISIONS MADE DURING THE PERMITTING PROCESS.
RESPONSIBILITY FOR THE USE OF THESE PLANS PRIOR TO OBTAINING PERMITS FROM ALL AGENCIES HAVING JURISDICTION OVER THE PROJECT WILL FALL SOLELY UPON THE USER.

ISSUE DATE:	02/25/2026
DESIGNED BY:	CJM
DRAWN BY:	CJM
CHECKED BY:	CTA
BID-CONTRACT:	

This item has been digitally signed and sealed by CHRISTOPHER T. ANDREONI, P.E. on the date adjacent to the seal.
CHRISTOPHER T. ANDREONI LICENSE No. 84184 STATE OF FLORIDA PROFESSIONAL ENGINEER
Signature must be verified on any electronic copies.
2026.02.25 15:17:24-05'00'
CHRISTOPHER T. ANDREONI, P.E.
FLORIDA REG. NO. 84184
(FOR THE FIRM)

CLIENT
RP POMPANO LLC

PROJECT
DOWNTOWN POMPANO - PHASE 1 - INFRASTRUCTURE IMPROVEMENTS

SHEET TITLE
WATER AND SEWER DETAILS

SHEET NUMBER CU-502
PROJECT NUMBER 15083.00

Plotted by: cmatthews On 2/25/2026 9:04 AM
Drawing name: H:\15083.00 - Downtown Pompano - RP Development LLC\Engineering\Cadd\Phase I (Infrastructure)\15083.00-CU-5XX-PH1.dwg
STATUS: PRELIMINARY